Ceramic Resonator (CERALOCK®)

Chip Type
Pd free products Introduction

Jan. 2018

Timing Device Division
Planning & Sales Promotion Department

VPPT-1801-0002-D

Copyright © Murata Manufacturing Co., Ltd. All rights reserved.

Contents

- Concept
- Intended Series
- Specification
- Release Schedule

 Copyright © Murata Manufacturing Co., Ltd. All rights reserved.

Concept

- Switch from Pd (palladium) **to Ni (Nickel)**
  - Pd is used for the inter electrode as following pictures.
  - Pd is one of rare metals. Limited countries are providing Pd.
  - So there is potential risk of supply and price increase.

To keep stable supply, Murata released the new products without Pd (Palladium).

Configuration

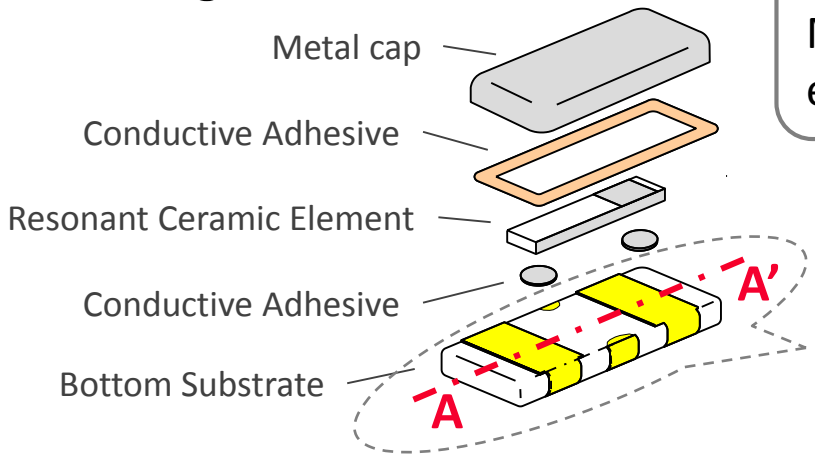

Bottom substrate has **the inner electrode**. Murata switch the material of the inner electrode from Pd to Ni.

***The cross section photo of Bottom Substrate**

Inner electrode (Pd ⇒ Ni)

Copyright © Murata Manufacturing Co., Ltd. All rights reserved.

Pd (Palladium) Locality

- **Russia** and **South Africa** are main nations to produce Pd.
- We are largely dependent on imports from them.
- So there is potential risk of supply.

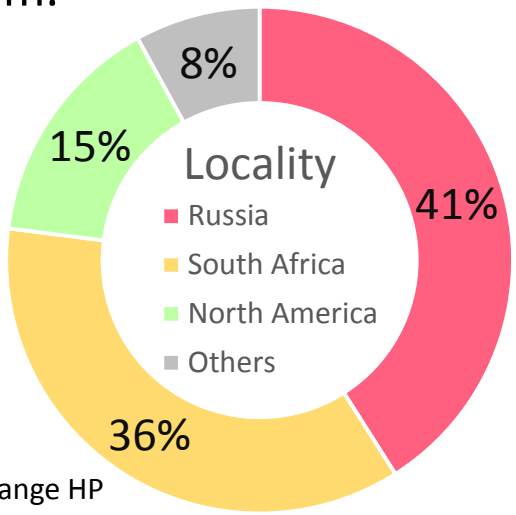

Reference :
Tokyo Commodity Exchange HP

Murata would like to realize continuously stable supply by switching from Pd to Ni.

Copyright © Murata Manufacturing Co., Ltd. All rights reserved.

Concept

➢ Comparison with existing products

- Same electrical characteristics
- Same dimensions
- Same electrode pattern

  *There is a series of which pattern is changed (Please see 9 page)

- Murata parts number is changed

  e.g.) [Current] CSTCE12M0G55-R0 ⇒ [New] CSTNE12M0G550000R0

Murata switches from the existing products(Pd use) to Pd free products.

Copyright © Murata Manufacturing Co., Ltd. All rights reserved.

Series which are changed to Pd free products

Existing Lineup

Frequency (MHz)	2.00 ～ 3.99	4.00 ～ 7.99	8.00～13.99	14.00～20.00
Series	CSTCC-G*	CSTCR-G*	CSTCE-G*	CSTCE-V*
Appearance		Tight-Frequency -Tolerance Standard-Frequency-Tolerance		

Keep exiting products (Pd free)

Switch to Pd free products

CSTCC-G and CSTCR-G(Standard-Frequency-Tolerance-Type) is excluded because of different construction. (Please see next page)

Copyright © Murata Manufacturing Co., Ltd. All rights reserved.

Comparison of Configuration

Keep existing products (Pd free)

CSTCC-G

CSTCR-G(Standard-Frequency-Tolerance)

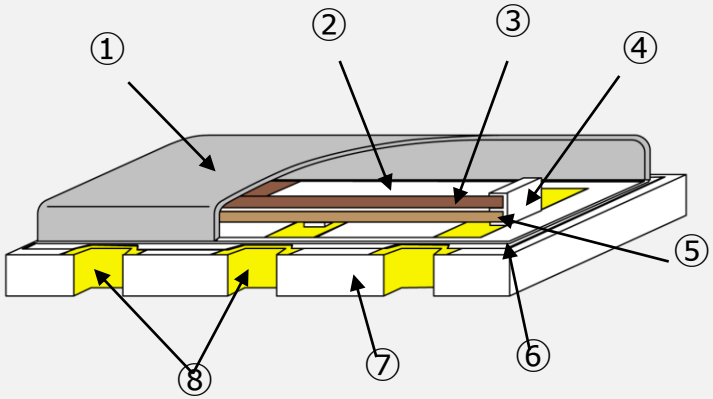

①	金属キャップ Metal Cap	ニッケル合金 Nickel Alloy
②	内部電極 Inner Electrode	銀 Silver
③	セラミック共振素子 Resonant Ceramic Element	圧電磁器(PZT) Piezo Ceramic (PZT)
④	導電性接着剤 Conductive Adhesive	銀＋エポキシ樹脂 Silver + Epoxy Resin
⑤	セラミック素子 Ceramic Element	磁器コンデンサ Ceramic Capacitor
⑥	絶縁性接着剤 Insulating Adhesive	エポキシ樹脂 Epoxy Resin
⑦	下基板 Bottom Substrate	アルミナ磁器 Alumina
⑧	外部電極 Outer Electrode	表面材：ニッケル+金 Surface Material : Nickel + Gold

Monolithic substrate (without Inner electrode)

Switch to Pd free products

CSTCR-G(Tight-Frequency-Tolerance)

CSTCE-G, CSTCE-V

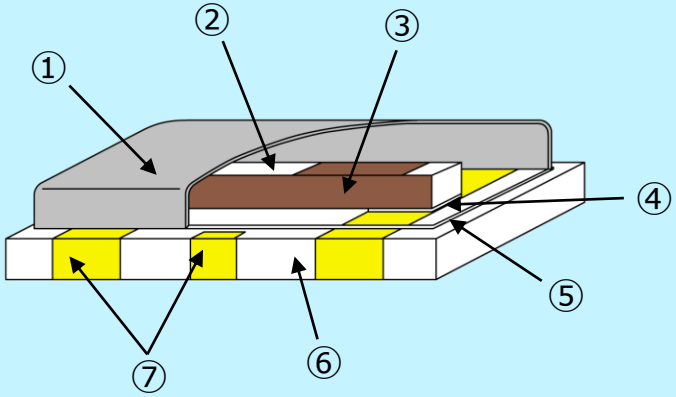

①	金属キャップ Metal Cap	ニッケル合金 Nickel Alloy
②	内部電極 Inner Electrode	銀 Silver
③	セラミック共振素子 Resonant Ceramic Element	圧電磁器(PZT) Piezo Ceramic (PZT)
④	導電性接着剤 Conductive Adhesive	銀＋エポキシ樹脂 Silver + Epoxy Resin
⑤	絶縁性接着剤 Insulating Adhesive	エポキシ樹脂 Epoxy Resin
⑥	下基板 Bottom Substrate	誘電体磁器 Dielectric Ceramic
⑦	外部電極 Outer Electrode	表面材:ニッケル+金 Surface Material : Nickel + Gold

Multi layer substrate (Inner electrode = Pd)

Copyright © Murata Manufacturing Co., Ltd. All rights reserved.

Specification (Comparison with Existing)

Changing Points

	Existing Products	Pd free Products
Material Inner electrode **Outer Electrode**	Pd Ag + Ni/Au Plate	**Ni** ***de-Palladium** **Cu** + Ni/Au Plate *Change to **Cu** of **basic electrode**
Part Number (Series)	CSTCR-G (tight frequency tol.) CSTCE-G (All) CSTCE-V (All)	CST**N**R-G (tight frequency tol.) CST**N**E-G (All) CST**N**E-V (All) *Change to **N** in 4 digits
Operating Temperature Range	Automotive : -40～+125℃ Consumer : -20～+80℃	Automotive : -40～+125℃ Consumer : **-40～+85**℃
Line-up of Initial Frequency Tolerance	±0.5%, ±0.3%, ±0.2% ±0.1%, ±0.07%	±0.5%, ±0.07% *Integrate in **2 lineup**
Electrode pattern	Change in parts of a series. (Please see next page)	
Dimensions	No change in every series.	
Electrical / Environmental Characteristics	No change in every series. **For Automotive**, we will revise the specification based on **AEC-Q200**.	

Copyright © Murata Manufacturing Co., Ltd. All rights reserved.

Electrode Pattern

Frequency (MHz)	Existing Products Series	Existing Products Electrode Pattern	Pd free Products Series	Pd free Products Electrode Pattern
4.00 ～ 7.99	CSTCR-G-C	A	CSTNR-G-C	A
	CSTCR-G-L		CSTNR-G-L	
8.00 ～ 13.99	CSTCE-G	B	CSTNE-G	B
	CSTCE-G-A		CSTNE-G-A	
	CSTCE-G-C		CSTNE-G-C	
	CSTCE-G-L		CSTNE-G-L	
14.00 ～ 20.00	CSTCE-V	C	CSTNE-V	
	CSTCE-V-A		CSTNE-V-C	
	CSTCE-V-C	B	CSTNE-V-C	
	CSTCE-V-L		CSTNE-V-L	

Change from "C" to "B" at the series.

A

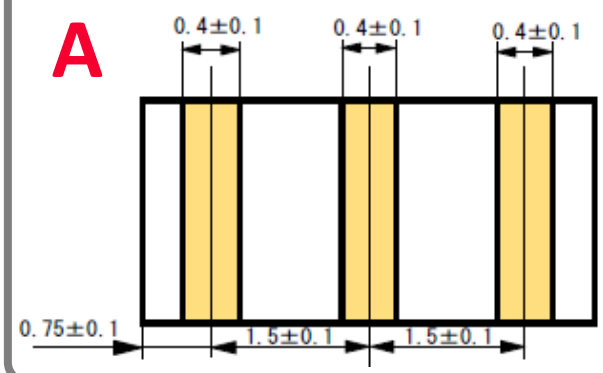

B

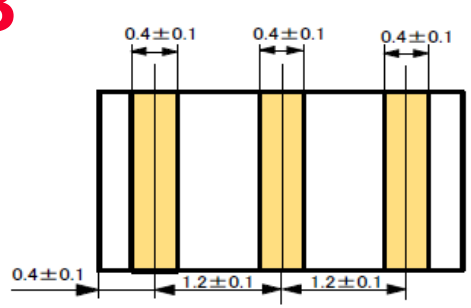

C

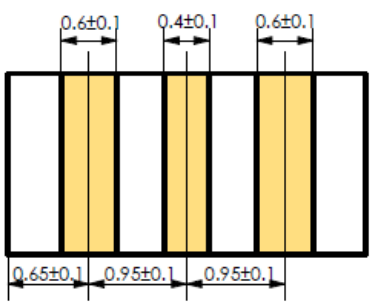

Copyright © Murata Manufacturing Co., Ltd. All rights reserved.

Recommendable Land Pattern

C pattern

Electrode Pattern

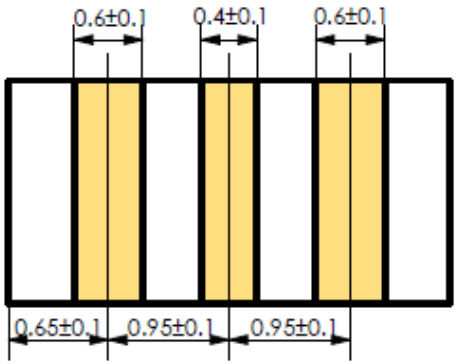

Recommendable Land Pattern

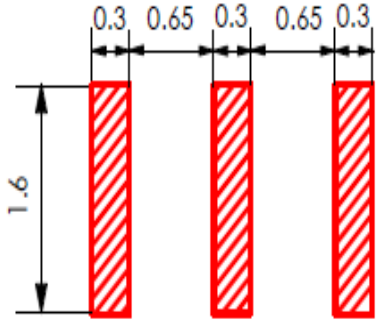

B pattern

Electrode Pattern

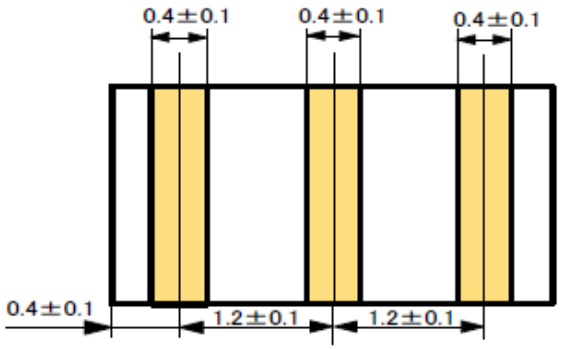

Recommendable Land Pattern

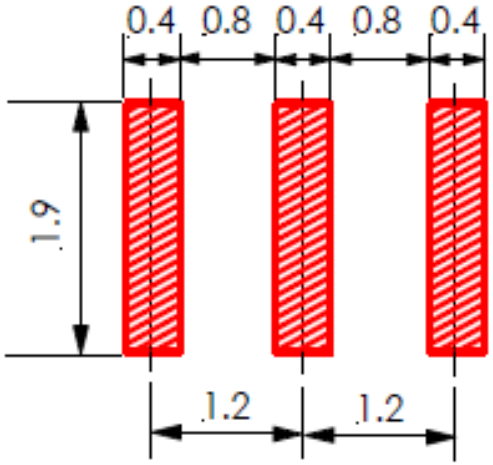

Copyright © Murata Manufacturing Co., Ltd. All rights reserved.

e.g.) 12MHz Item Comparison (1)

Standard Tolerance for Consumer **Difference** : Part Number, Operating Temperature Range

	Existing Products	Pd free Products
Part Number	CSTCE12M0G55-R0	CST**N**E12M0G55**0000**R0
Operating Temperature Range	-20～+80℃	**-40**～**+85**℃
Storage Temperature Range	-55～+85℃	-55～+85℃
Frequency	12.000MHz	12.000MHz
Initial Frequency Tolerance	±0.50% max.	±0.50% max.
Frequency Shift by Temperature	±0.20% max. (-20～+80℃)	±0.20% max. (**-40**～**+85**℃)
Oscillating Frequency Aging	±0.10% max.	±0.10% max.
Resonant Impedance	30Ω max.	30Ω max.
Insulation Resistance	500MΩ min.	500MΩ min.

Copyright © Murata Manufacturing Co., Ltd. All rights reserved.

e.g.) 12MHz Item Comparison (2)

Tight Tolerance for Consumer

Difference : Part Number

	Existing Products	Pd free Products
Part Number	CSTCE12M0GH5L99-R0 (CSTCE12M0G15L99-R0)	CSTNE12M0GH5L000R0
Operating Temperature Range	-40～+85℃ (0～+70℃)	-40～+85℃
Storage Temperature Range	-55～+85℃	-55～+85℃
Frequency	12.000MHz	12.000MHz
Initial Frequency Tolerance	±0.07% max. (±0.10% max.)	±0.07% max.
Frequency Shift by Temperature	±0.11% max. (-40～+85℃) (±0.08% max. (0～+70℃))	±0.11% max. (-40～+85℃)
Oscillating Frequency Aging	±0.07% max.	±0.07% max.
Resonant Impedance	30Ω max.	30Ω max.
Insulation Resistance	500MΩ min.	500MΩ min.

Copyright © Murata Manufacturing Co., Ltd. All rights reserved.

e.g.) 12MHz Item Comparison (3)

Standard Tolerance for Automotive

Difference : Part Number

	Existing Products	Pd free Products
Part Number	CSTCE12M0G55A-R0	CST**N**E12M0G55A**000**R0
Operating Temperature Range	-40～+125℃	-40～+125℃
Storage Temperature Range	-55～+125℃	-55～+125℃
Frequency	12.000MHz	12.000MHz
Initial Frequency Tolerance	±0.50% max.	±0.50% max.
Frequency Shift by Temperature	±0.20% max. (-40～+125℃)	±0.20% max. (-40～+125℃)
Oscillating Frequency Aging	±0.10% max.	±0.10% max.
Resonant Impedance	30Ω max.	30Ω max.
Insulation Resistance	500MΩ min.	500MΩ min.

Copyright © Murata Manufacturing Co., Ltd. All rights reserved.

e.g.) 12MHz Item Comparison (4)

Tight Tolerance for Automotive

Difference : Part Number

	Existing Products	Pd free Products
Part Number	CSTCE12M0GH5C99-R0 (CSTCE12M0G15C99-R0)	CSTNE12M0GH5C000R0
Operating Temperature Range	-40～+125℃	-40～+125℃
Storage Temperature Range	-55～+125℃	-55～+125℃
Frequency	12.000MHz	12.000MHz
Initial Frequency Tolerance	±0.07% max. (±0.10% max.)	±0.07% max.
Frequency Shift by Temperature	±0.13% max. (-40～+125℃)	±0.13% max. (-40～+125℃)
Oscillating Frequency Aging	±0.07% max.	±0.07% max.
Resonant Impedance	30Ω max.	30Ω max.
Insulation Resistance	500MΩ min.	500MΩ min.

Copyright © Murata Manufacturing Co., Ltd. All rights reserved.

Schedule

Frequency (MHz)	Freq. Tolerance	Series	2018 Jan.	Feb.	Mar.	Apr.
4～7.99	Tight	CSTNR-G-L/C	★4MHz	Sample →		★MP Start
8～9.99	Standard	CSTNE-G(-A)	★8MHz	Sample →		★MP Start
	Tight	CSTNE-G-C/L				
10～13.99	Standard	CSTNE-G(-A)	★10, 12MHz ★MP Start			
	Tight	CSTNE-G-C/L				
14～20	Standard	CSTNE-V(-C)	★16, 20MHz	Sample →		★MP Start
	Tight	CSTNE-V-C/L				

- ✓ We will release all frequency products from Apr. 2018.
- ✓ We issue parts termination and change notification from Mar. 2018.
- ✓ Low built-in load capacitance resonator (5pF/10pF) will be released in Oct. 2018.

Copyright © Murata Manufacturing Co., Ltd. All rights reserved.

Thank you for your attention!